274101

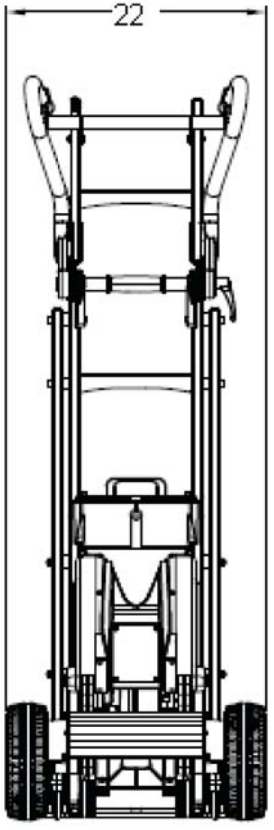

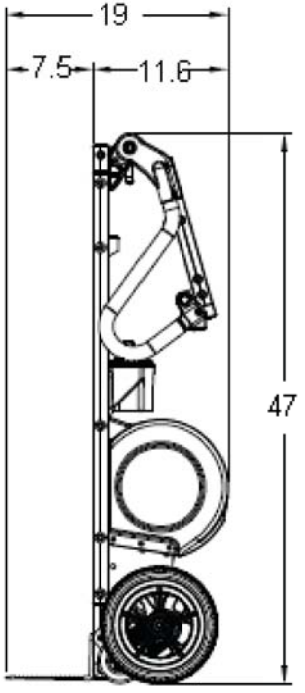

Specs

- Overall width: 22”
- Overall height: 47”
- Overall depth: 19”

pacity: 725 lbs
lt: 2 piece with clasp – 10’
ight: 86 lbs

REPLACEMENT PARTS LIST

ITEM	PART NO.	DESCRIPTION	QTY.
1	274199	REPLACEMENT BELT 137” X 2”	1
2	274172	WHEEL: MICROCELLULAR	2
LIFTKAR OPTIONS			
3	274103	SNAP–ON TOE PLATE	1
4	274116	EXTRA BATTERY PACK	1
5	274181	IN–TRANSIT 12 VOLT DC AUTO CHARGER	1
6	274185	US STANDARD BATTERY CHARGER	1
7	274191	CANADIAN STANDARD BATTERY CHARGER	1

Power LiftKar HD

- Two Models
- Uni – straight frame – accepts dolly option for 4–wheel support.
- Fold – upper handle angle can be adjusted. Best for copiers, safes, heavy motors or any short and heavy load which would require the user to pull the load back to a very low position. The adjustable angle position on the
- Fold model allows the user to stand upright when using the truck at a very low angle.
- Innovative edge–of–step braking system – automatically applies brake when wheels are at edge of step. Helps prevent loss of load control caused by accidental rolling down steps.
- Brake can be shut off for use on level ground – prevents unwanted braking when moving over ground with an uneven surface.
- Two operating modes: single step (ascend or descend button must be pressed after each step – ideal for maximum control), or continuous climb.
- 24v quick–change battery pack – sealed maintenance–free battery.
- Two climbing speeds: 6 steps/min. or 10 steps/min.
- Average number of steps with fully charged battery:
  440 lbs. of cargo – 220 steps
  550 lbs. of cargo – 190 steps
  725 lbs. of cargo – 120 steps.
- Power LiftKar Options
- Part # 274103 – Snap–on toe plate equipped with 4 dual casters.
- Provides additional cargo space and the ability to move loads without tilting truck. Especially useful in confined areas.
- Part # 274102 – Fold–out rear wheel carriage (Universal model only) slides easily into position to provide 4–wheel support.
- Part # 274116 – Extra battery pack.

THIS DRAWING IN ALL PARTICULARS IS WESCO INDUSTRIAL PRODUCTS INC. PROPERTY. ALL RIGHTS OF DESIGN, INVENTION OR USE OF ARE RESERVED.

APP | ECN & DATE | REV. | REVISIONS

WESCO INDUSTRIAL PRODUCTS INC.
NORTH WALES PENNA. 19454

PART NAME: Fold Power LiftKar HD

DRAWN:
CHECKED:
APP. ENGR.
SCALE:

TOLERANCE UNLESS OTHERWISE SPECIFIED

FRACTION	3 PLACE DECIMAL	2 PLACE DECIMAL
± 1/64	± .005	± .01

ANGULAR ± 1–1/2° SHEET 1 OF 1

BREAK ALL SHARP EDGES AND REMOVE ALL BURRS

B– 274101 REV B