272945

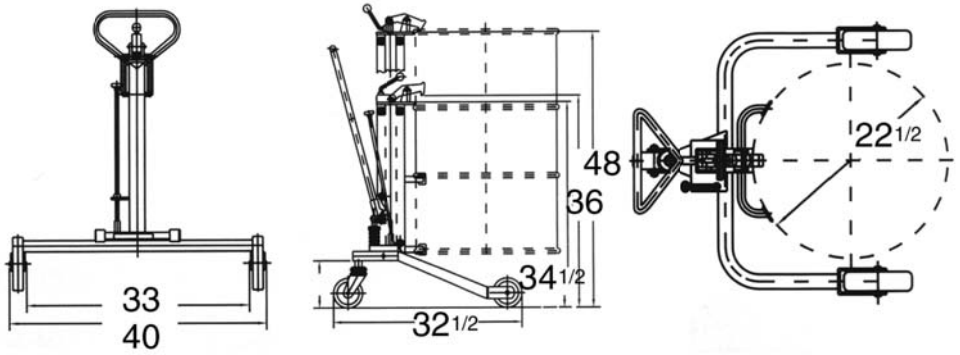

ECONOMY HYDRAULIC DRUM TRUCK

- Handles steel drums up to 22½" in diameter.
- 2 rigid and 1 swivel locking caster for easy maneuverability.
- Pallet truck–type pump handle.
- Works with most rimmed steel and poly drums.

P/N	272945
Model	HDT–550
Overall Width	40"
Overall Height	46"
Overall Depth	32.5"
Capacity	550 lbs
Wheels	8" Poly.
Caster	5" Poly.
Lift Range	13.5"
Lift	0.87"/stroke
Weight	99 lbs
Boxed Size	34.5" x 15" 12"

THIS DRAWING IN ALL PARTICULARS IS WESCO INDUSTRIAL PRODUCTS INC. PROPERTY. ALL RIGHTS OF DESIGN, INVENTION OR USE OF ARE RESERVED.

REV.	ECN & DATE	APP	REVISIONS
A	12–06–12 UPDATED	R W S	

WESCO INDUSTRIAL PRODUCTS INC.
NORTH WALES PENNA. 19454

PART NAME: HDT–550

TOLERANCE UNLESS OTHERWISE SPECIFIED

FRACTION	3 PLACE DECIMAL	2 PLACE DECIMAL
± 1/64	± .005	± .01

ANGULAR ± 1–1/2° SHEET 1 OF 1

BREAK ALL SHARP EDGES AND REMOVE ALL BURRS

DRAWN:
CHECKED:
APP. ENGR.
SCALE:

B– 272945 REV A