220486

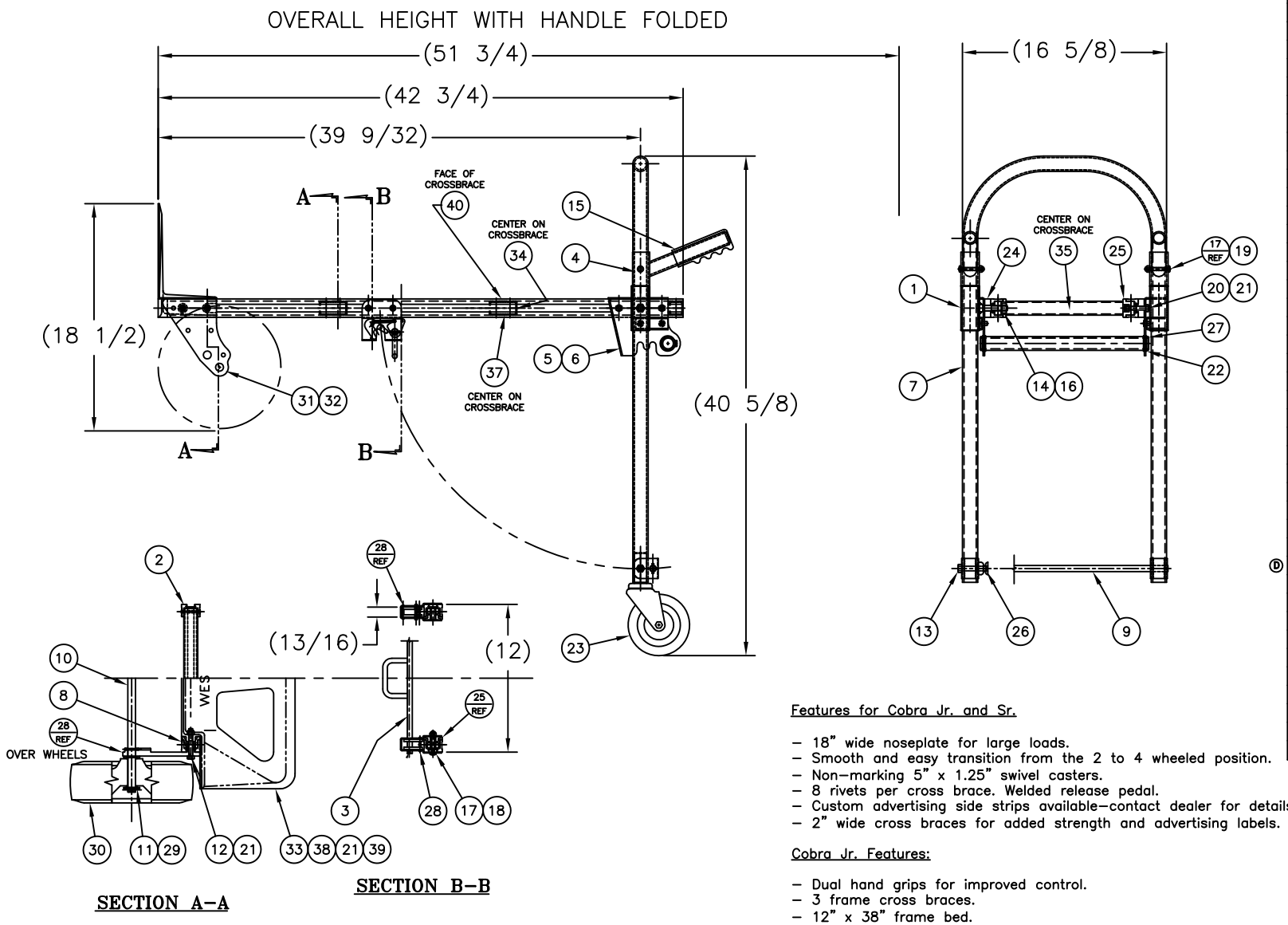

Features for Cobra Jr. and Sr.

- 18" wide noseplate for large loads.
- Smooth and easy transition from the 2 to 4 wheeled position.
- Non–marking 5" x 1.25" swivel casters.
- 8 rivets per cross brace. Welded release pedal.
- Custom advertising side strips available–contact dealer for details.
- 2" wide cross braces for added strength and advertising labels.

Cobra Jr. Features:

- Dual hand grips for improved control.
- 3 frame cross braces.
- 12" x 38" frame bed.

BILL OF MATERIAL

ITEM	PART NO.	DESCRIPTION	QTY.
1	055105	PIVOT SOCKET WELDMENT	2
2	055113	FRAME ASSEMBLY	1
3	055094	LATCH HANDLE	1
4	055122	PIN HANDLE WELDMENT	2
5	055125	R.H. BRACKET ASS'Y	1
6	055126	L.H. BRACKET ASS'Y	1
7	055121	HANDLE	1
8	055127	FILLER CHANNEL	2
9	055099	SPREADER BAR	1
10	050229	AXLE (18 1/4)	1
11	100051	FLAT WASH.,5/8 SAE PLT	4
12	108168	5/16–18 X 2 1/4 HHCS	4
13	108152	3/8–16 X 2" HHCS	2
14	108366	FLAT WASH.7/16 SAE PLT	4
15	108949	HANDGRIP (RED) 1 1/8	2
16	108916	7/16–14 NUT, 2–WAY	2
17	108929	1/4–20 NUT, NYLOCK	6
18	108932	1/4–20 X 1 3/4 PHPS	4
19	108933	1/4–20 X 1 7/8 PHPS	2
20	108934	5/16–18 X 1 3/4 HHCS	4
21	108132	LOCKNUT 5/16 – 18	12
22	108937	1 1/8 RET.RING, BOWED	4
23	108979	CASTER (5" X 1 1/4)	2
24	108980	MOLDED SPACER	2
25	108981	MOLDED CLAMP	4
26	109019	LOAD END CAP	2
27	108984	UPPER HANDLE	1
28	109644	SPG.PIN ø1/8 X 1 1/8	2
29	108219	COTTER PIN (ø.148)	2
Ⓓ 30	150590	WHEEL: "Z" 10 X 2–3/4"	2
31	151508	R.H. AXLE BOX	1
32	151509	L.H. AXLE BOX	1
33	053313	STAMP: WESCO, S18/E18	1
34	154021	WARNING LABEL	1
35	154060	"WESCO"/CAP. LABEL	1
36	108304	POLYBAG 28 X 52 X.003	1
37	154113	LABEL: FRAME WARRANTY	1
38	108169	BOLT: CARR. 5/16–18X1	4
39	055131	CLAMP: EXTR.	1
40	154159	LABEL: WESCO COBRA	1

P/N	220486
Model	CBR–JR–E18–Z
Capacity 2 wheel	600 lbs.
Capacity 4 wheel	1,200 lbs.
Approximate Weight	43.5 lbs.
Overall Height	51.75"
Frame bed	12" x 38"
Boxed	No

THIS DRAWING IN ALL PARTICULARS IS WESCO MFGR. CO. PROPERTY. ALL RIGHTS OF DESIGN, INVENTION OR USE OF ARE RESERVED.

PRINT ISSUED
FEB. 27, 2009
WESCO MANUFACTURING ENGINEERING DEPARTMENT

REV	REVISIONS	ENG & MFG	APP
D	6651 ITEM 30 WAS P/N 150280	02–27–09	RS
C	6055 ADD 154158 ADD 154159	12/28/06	TG
B	04–26–06 DRAWN INTO CAD UPDATE ROUTER		KL

WESCO MANUFACTURING CO.
NORTH WALES PENNA. 19454

PART NAME: CBR–JR–E18–Z FINAL ASS'Y ALUM. 2–N–1
TOLERANCE UNLESS OTHERWISE SPECIFIED: FRACTION ± 1/64; 3 PLACE DECIMAL ± .005; 2 PLACE DECIMAL ± .01; ANGULAR ± 1–1/2°
SHEET 1 OF 1
BREAK ALL SHARP EDGES AND REMOVE ALL BURRS

DRAWN: P. SPENCER
DATE: 07–30–96
CHECKED:
SCALE: 1/4 SCALE

D–220486 REV D