220333

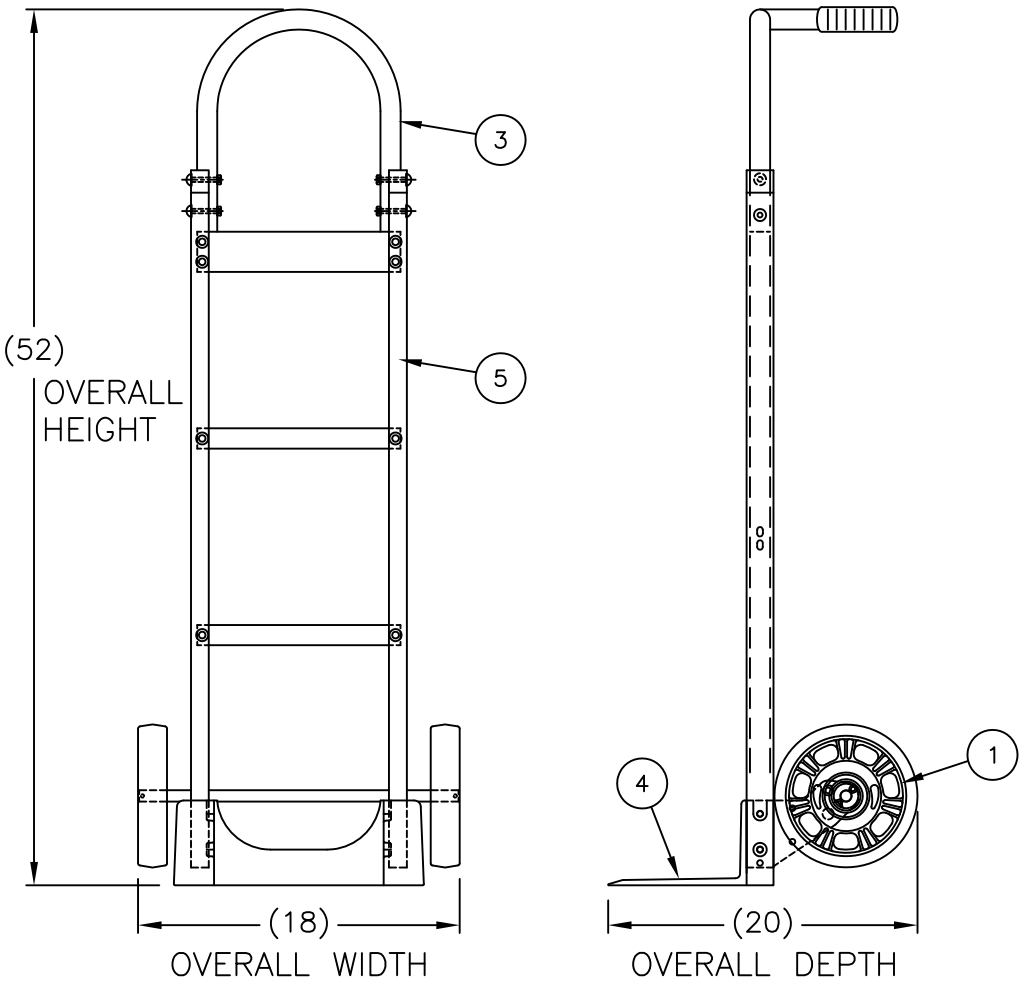

REPLACEMENT PARTS LIST

	ITEM	PART NO.	DESCRIPTION	QTY.
	1	054048	KIT: WHEEL "R3" WESCO–LITE	1
*	2	108990	BOX: 40–1/2" X 13 X 10	1
	3	151511	HANDLE: PIN	1
	4	151521	NOSEPLATE (14")	1
	5	153855	KIT: STRAIGHT FRAME #0	1

COBRA–LITE FEATURES:

- All aluminum construction.
- Heavy duty cast 7.5" X 14" or 7.5" X 18" wide nose plate options.
- Quality light weight truck at an economical price.
- Ships KD and boxed or as components.
- Assembly option available.
- All 2" wide cross braces for additional strength. Great for advertising label.

Series 420 Features:

- High back pin handle.
- Comfortable vinyl handle grip.
- 52" overall height.

P/N	220333
Model	420–T14–R3
Weight	19.5 lbs
Capacity	600 lbs
Box	No
Wheel	8" x 1.625"
Type	Moldon Rubber
Hub	Aluminum Offset

THIS DRAWING IN ALL PARTICULARS IS WESCO MFGR. CO. PROPERTY. ALL RIGHTS OF DESIGN, INVENTION OR USE OF ARE RESERVED.

PRINT ISSUED

APR 19, 2006

WESCO MANUFACTURING
ENGINEERING DEPARTMENT

REV.	ECN & DATE		APP
B	02–06–13	UPDATED	R W S
A	04–19–06	DRAWN INTO CAD UPDATED ROUTER	KL

REVISIONS

WESCO MANUFACTURING CO.
NORTH WALES PENNA. 19454

PART NAME: 420–T14–R3 (COBRA–LITE)

DRAWN: SKH 4–21–93
CHECKED: GRB 3–14–95
APP. ENGR.
SCALE: 7" = 1"

TOLERANCE UNLESS OTHERWISE SPECIFIED

FRACTION	3 PLACE DECIMAL	2 PLACE DECIMAL
± 1/64	± .005	± .01

ANGULAR ± 1–1/2° SHEET 1 OF 1

BREAK ALL SHARP EDGES AND REMOVE ALL BURRS

B– 220333 REV B